# ALTERNATION HISTORY RECORDS

| Date | Version | Mark | Page | Description | Drafter | Approver |
|---|---|---|---|---|---|---|
| 2026-03-04 | C | / | / | Release with a new version | Doris Chang | / |

## Part Numbering System:

| AT | 03 | J | B | 10K |
|---|---|---|---|---|
| Series Name<br>AT:Automotive Chip Resistor | Type Inch (mm)<br>01-0201(0603)<br>02-0402(1005)<br>03-0603(1608)<br>05-0805(2012)<br>06-1206(3216)<br>10-1210(3225)<br>0A-2010(5025)<br>12-2512(6432) | Tolerance<br>F= ± 1%<br>J= ± 5 %<br>P : Jumper | Package<br>Z=3Kpcs/10"Reel<br>A=4Kpcs/7"Reel<br>B=5Kpcs/7"Reel<br>C=10Kpcs/7"Reel<br>M=15Kpcs/7"Reel<br>D=10Kpcs/10"Reel<br>X=16Kpcs/13"Reel<br>E=20Kpcs/13"Reel<br>G =70Kpcs/13"Reel | Resistance<br>1R2=1.2Ω<br>10K=10KΩ<br>10K5=10.5KΩ<br>100K=100KΩ<br>1M2=1.2MΩ |

## FEATURES

1). Automotive grade AEC Q-200 qualified
2.) 100% CCD inspection
3). Lower assembly costs
4). Higher component and equipment reliability
5) Suitable for high density print circuit board as sembly
6) Reduced size of final equipment
7). RoHS 2 compliant with exemption 7C-I and Halogen free products
8). Flammability against UL94-V0

## APPLICATIONS

1) Consumer electrical equipment
2) EDP, Computer application
3) Telecom application
4) Hybrid module
5) Automotive
6) Mobile phone

## DESCRIPTION

The resistors are constructed in a high grade ceramic body (aluminum oxide). Internal metal electrodes are added at each end and connected by a resistive paste that is applied to the top surface of the substrate. The composition of the paste is adjusted to give the approximate resistance required and the value is trimmed to within tolerance by laser cutting of this resistive layer.

The resistive layer is covered with a protective coat. Finally, the two external end terminations are added. For ease of soldering the outer layer of these end terminations is a Tin (lead free) alloy.

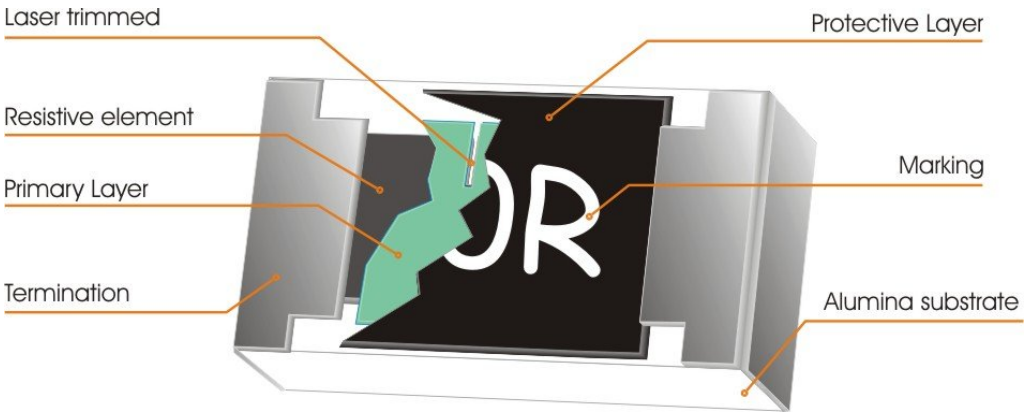


Fig 1. Construction of Chip-R

## QUICK REFERENCE DATA

| Item | General Specification | | | | | | | |
|---|---|---|---|---|---|---|---|---|
| Series No. | AT12 | AT0A | AT10 | AT06 | AT05 | AT03 | AT02 | AT01 |
| Size code | 2512 (6432) | 2010 (5025) | 1210 (3225) | 1206 (3216) | 0805 (2012) | 0603 (1608) | 0402 (1005) | 0201 (0603) |
| Resistance Range | 1Ω~10MΩ Jumper (0Ω) | | 0Ω 1Ω~10MΩ | | | | | 1Ω~ 10MΩ ( ±1%) 1Ω~ 10MΩ ( ±5%)Jumper (0Ω) |
| Resistance Tolerance | ±1%, E96/E24, ±5%, E24 | | | | | | | |
| TCR (ppm/°C) | 10Ω≤ Rn < 1MΩ : ±100 1Ω≤ Rn < 9.76Ω 1MΩ≤ Rn ≤10MΩ : ±200 | | 10Ω< R≤ 10MΩ: ≤ ±100 R≤10Ω:-200~+400 | | | | | 10Ω - 10MΩ, ≤±200ppm 4.02 - 9.76Ω, +350 ~ -100ppm 1-3.92Ω, +600 ~ -200ppm |
| Max. dissipation @ $T_{amb}$=70°C | 1W | 3/4W | 1/2W | 1/4W | 1/8W | 1/10W | 1/16W | 1/20W |
| Max. Operation Voltage | 250V | 200V | 200V | 200V | 150V | 75V | 50V | 25V |
| Max. Overload Voltage | 500V | 400V | 400V | 400V | 300V | 150V | 100V | 50V |
| Operation temperature | -55 ~ +155°C | | | | | | | |

Remark:

1. This is the maximum voltage that may be continuously supplied to the resistor element, see "IEC publication 60115-8"
2. Max. Operation Voltage : So called RCWV (Rated Continuous Working Voltage) is determined by

$$RCWV = \sqrt{Rated\,Power \times Resistance\,Value}$$ or Max. RCWV listed above, whichever is lower.

**For Jumper (0Ω) :**

| Item | | General Specification | | | | | | | |
|---|---|---|---|---|---|---|---|---|---|
| Series No. | | AT12 | AT0A | AT10 | AT06 | AT05 | AT03 | AT02 | AT01 |
| Size code | | 2512 (6432) | 2010 (5025) | 1210 (3225) | 1206 (3216) | 0805 (2012) | 0603 (1608) | 0402 (1005) | 0201 (0603) |
| Resistance Range | | ≤50mΩ for P tolerance | | ≤50mΩ for P tolerance ≤30mΩ for F tolerance | | | | | ≤50mΩ for P tolerance |
| TCR (ppm/°C) | | TCR is not applicable for Jumper product | | | | | | | |
| Max. dissipation @ $T_{amb}$=70°C | | 1W | 3/4W | 1/2W | 1/4W | 1/8W | 1/10W | 1/16W | 1/20W |
| P tol. | Rated Current | 4.5A | 3.2A | 3A | 2A | 1.6A | 1A | 1A | 1A |
| | Peak Current | 11A | 8A | 7.5A | 5A | 3.2A | 3A | 2A | 1.5A |
| F tol. | Rated Current | - | | 4A | 2.9A | 2A | 1.8A | 1A | - |
| | Peak Current | - | | 10A | 5.8A | 4A | 3.6A | 2A | - |
| Operation temperature | | -55 ~ +155°C | | | | | | | |

## DIMENSIONS (unit : mm)

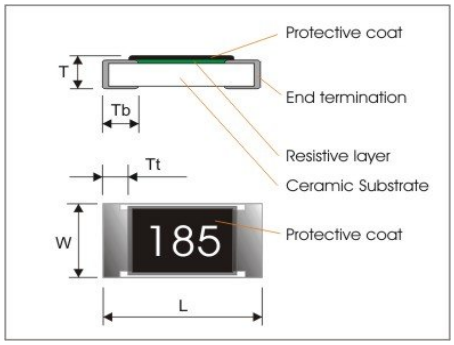


| Series | AT12 | AT0A | AT10 | AT06 | AT05 | AT03 | AT02 | AT01 |
|---|---|---|---|---|---|---|---|---|
| L | 6.40±0.20 | 5.00±0.20 | 3.10±0.10 | 3.10±0.10 | 2.00±0.10 | 1.60±0.10 | 1.00±0.05 | 0.60±0.03 |
| W | 3.20±0.20 | 2.50±0.20 | 2.60±0.10 | 1.60±0.10 | 1.25±0.10 | 0.80±0.10 | 0.50±0.05 | 0.30±0.03 |
| T | 0.60±0.10 | 0.55±0.10 | 0.55±0.10 | 0.55±0.10 | 0.50±0.15 | 0.45±0.15 | 0.35±0.05 | 0.23±0.03 |
| Tt | 0.65±0.25 | 0.65±0.25 | 0.50±0.20 | 0.50±0.20 | 0.40±0.20 | 0.30±0.10 | 0.20±0.10 | 0.10±0.05 |
| Tb | 0.90±0.25 | 0.60±0.25 | 0.50±0.20 | 0.45±0.20 | 0.40±0.20 | 0.30±0.15 | 0.25±0.10 | 0.15±0.05 |

## FUNCTIONAL DESCRIPTION

### Product characterization

Standard values of nominal resistance are taken from the E24 series for resistors with a tolerance of ±5%, and E96 series for resistors with a tolerance of ±1%. The values of the E24/E96 series are in accordance with "IEC publication 60063"

### Derating Curve

The power that the resistor can dissipate depends on the operating temperature; see Fig.2

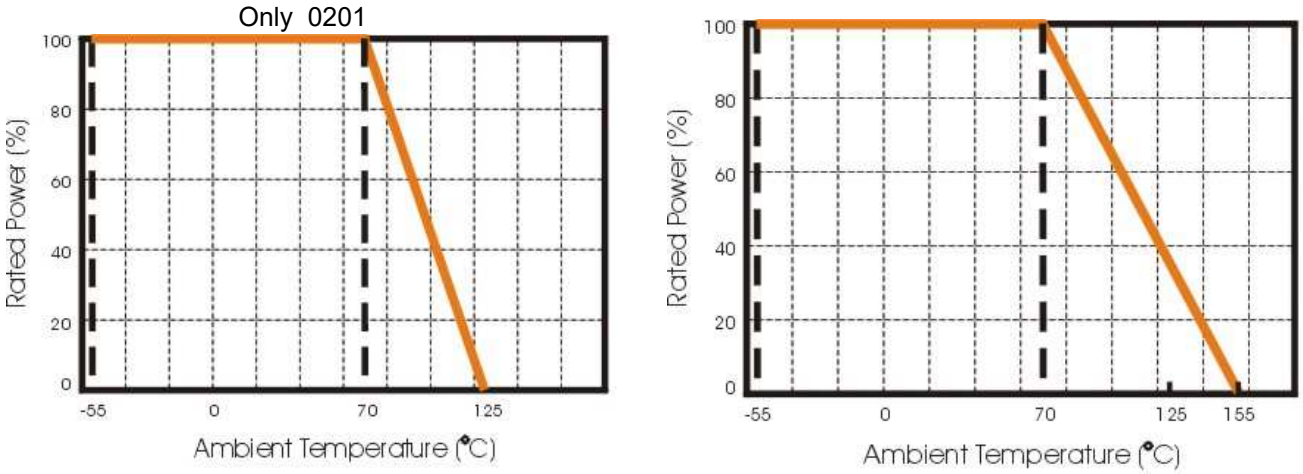


Figure 2 Maximum dissipation in percentage of rated power as a function of the ambient temperature

## MOUNTING

Due to their rectangular shapes and small tolerances, Surface Mountable Resistors are suitable for handling by automatic placement systems.

Chip placement can be on ceramic substrates and printed-circuit boards (PCBs).

Electrical connection to the circuit is by individual soldering condition.

## STORAGE AND HANDLING CONDITIONS:

1. Products are recommended to be used up within two years since operation date as ensured shelf life. Check solderability in case shelf life extension is needed.
2. To store products with following condition:

   Temperature :5 to 40°C

   Humidity :20 to 70% relative humidity
3. Caution:

   a. Don't store products in a corrosive environment such as sulfide, chloride gas, or acid.

   It may cause oxdization of electrode, which easily be resulted in poor soldering.

   b. To store products on the shelf and avoid exposure to moisture.

   c. Don't expose products to excessive shock, vibration, direct sunlight and so on

## SOLDERING CONDITION follows J-STD-020D

The robust construction of chip resistors allows them to be completely immersed in a solder bath of 260°C for 10 seconds. Therefore, it is possible to mount Surface Mount Resistors on one side of a PCB and other discrete components on the reverse (mixed PCBs).

Surface Mount Resistors are tested for solderability at 235°C during 2 seconds. The test condition for no leaching is 260°C for 30 seconds.

Typical examples of soldering processes that provide reliable joints without any damage are given in Fig 3.

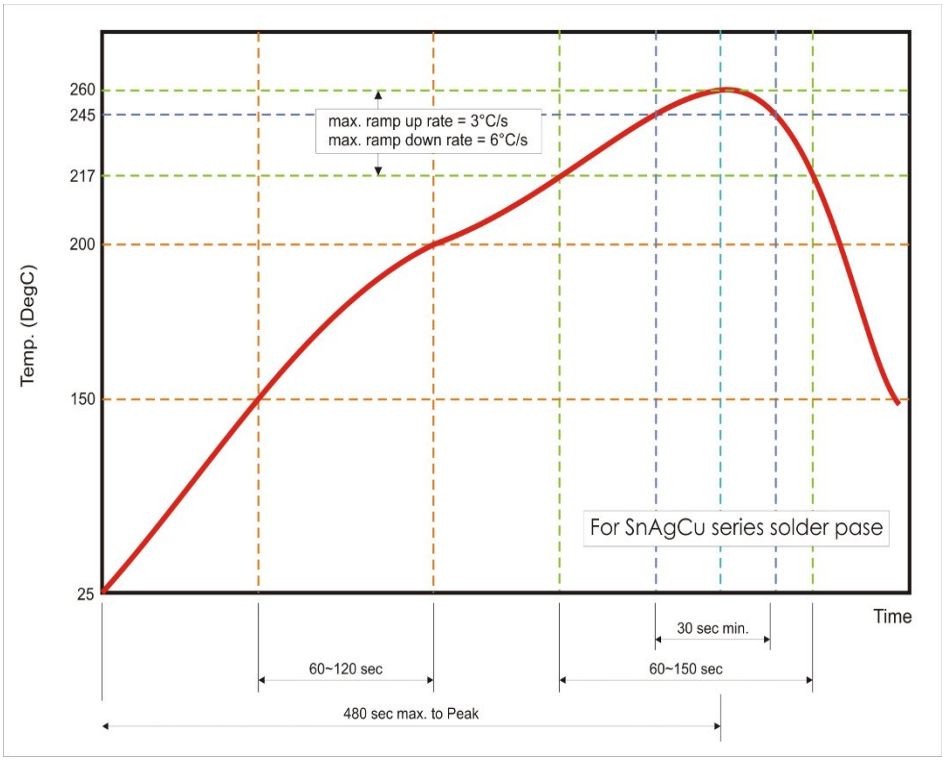


Fig 3. Recommended IR reflow soldering profile for SMT process with SnAgCu series solder paste

## Manual soldering (solder iron)

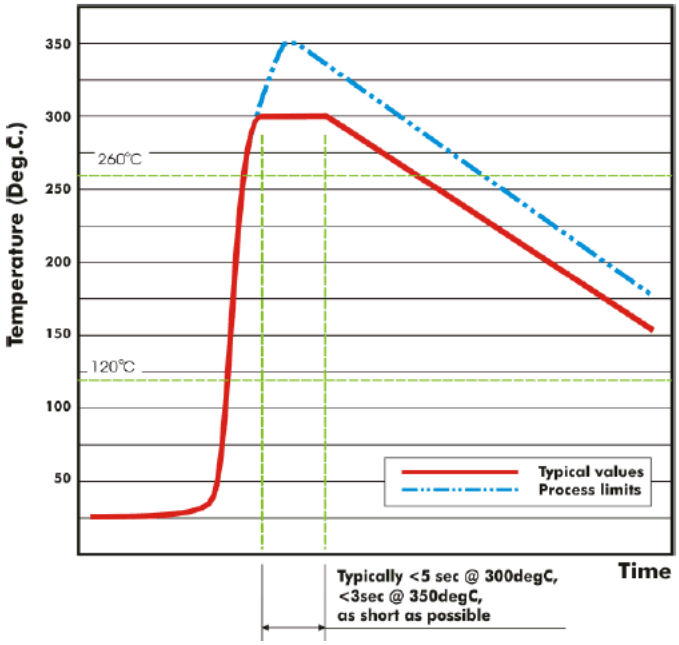


## Recommended Solder Pad Dimensions

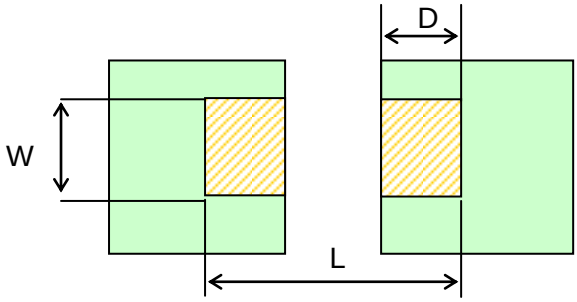


| Type | W (mm) | L (mm) | D (mm) |
|---|---|---|---|
| 01(0201) | 0.25~0.3 | 0.7~0.9 | 0.3~0.4 |
| 02(0402) | 0.5~0.6 | 1.4~1.6 | 0.4~0.6 |
| 03(0603) | 0.7~0.9 | 2.0~2.2 | 0.8~1.0 |
| 05(0805) | 1.0~1.4 | 3.2~3.8 | 0.9~1.4 |
| 06(1206) | 2.0~2.4 | 4.4~5.0 | 1.2~1.8 |
| 10(1210) | 2.0~2.4 | 4.4~5.0 | 2.3~3.5 |
| 0A(2010) | 3.3~3.7 | 5.7~6.5 | 2.3~3.5 |
| 12(2512) | 3.6~4.0 | 7.8~8.6 | 2.3~3.5 |

Remark :

Due to their rectangular shapes and small tolerances, Surface Mountable Resistors are suitable for handling by automatic placement systems.

Chip placement can be on ceramic substrates and printed-circuit boards (PCBs).

Electrical connection to the circuit is by individual soldering condition.

The end terminations guarantee a reliable contact.

## MARKING

| Size \ Nr. Of digit of code\tolerance | ±5% & Jumper (0Ω) | ±1% |
|---|---|---|
| 2512, 2010 | 4 digits marking | 4 digits marking |
| 1210, 1206, 0805 | 3 digits marking | 4 digits marking |
| 0603 | 3 digits marking | 3 digits marking |
| 0402,0201 | No marking | |

1) No marking for 0402 and 0201 size.
2)Jumper (0 Ω):
2512, 2010 : 0000
1210,1206, 0805, 0603 : 000
3) 3 digits marking for ±5% 1210,1206, 0805, 0603:

Each resistor is marked with a three digits code on the protective coating to designate the nominal resistance value.
2 significant digits followed by No. of zeros.

4) 3 digits marking for±1% 0603 size:

| Nominal resistance | Description |
|---|---|
| 1.E24 series | 2 significant digits followed by No. of zeros.<br>Example |

| RESISTANCE | 4.7Ω | 47Ω | 470Ω | 4K70 | 47K0 | 470K | 4M70 |
|---|---|---|---|---|---|---|---|
| 3 digits marking | 4R7 | 470 | 471 | 472 | 473 | 474 | 475 |

2.E96 series

The 1st two digit codes are referring to the CODE on the table, the 3rd code is the index of resistance value.
Repeat values between E24 and E96 series, whose marking are based on the E96 CODE table.

| Code | Z | Y | X | A | B | C | D | E | F | G |
|---|---|---|---|---|---|---|---|---|---|---|
| Multiplier | $10^{-3}$ | $10^{-2}$ | $10^{-1}$ | $10^{0}$ | $10^{1}$ | $10^{2}$ | $10^{3}$ | $10^{4}$ | $10^{5}$ | $10^{6}$ |

Example

| RESISTANCE | 1.78Ω | 17.8Ω | 178Ω | 1K78 | 17K8 | 178K | 1M78 |
|---|---|---|---|---|---|---|---|
| 3 digits marking | 25Y | 25X | 25A | 25B | 25C | 25D | 25E |

3. Remark: There is no marking for the items not under E24 and E96 series.

E96 CODE table:

| CODE | R value | CODE | R-value | CODE | R-Value | CODE | R-value | CODE | R-value | CODE | R-value | CODE | R-value | CODE | R-value |
|---|---|---|---|---|---|---|---|---|---|---|---|---|---|---|---|
| 01 | **100** | 13 | **133** | 25 | **178** | 37 | **237** | 49 | **316** | 61 | **422** | 73 | **562** | 85 | **750** |
| 02 | **102** | 14 | **137** | 26 | **182** | 38 | **243** | 50 | **324** | 62 | **432** | 74 | **576** | 86 | **768** |
| 03 | **105** | 15 | **140** | 27 | **187** | 39 | **249** | 51 | **332** | 63 | **442** | 75 | **590** | 87 | **787** |
| 04 | **107** | 16 | **143** | 28 | **191** | 40 | **255** | 52 | **340** | 64 | **453** | 76 | **604** | 88 | **806** |
| 05 | **110** | 17 | **147** | 29 | **196** | 41 | **261** | 53 | **348** | 65 | **464** | 77 | **619** | 89 | **825** |
| 06 | **113** | 18 | **150** | 30 | **200** | 42 | **267** | 54 | **357** | 66 | **475** | 78 | **634** | 90 | **845** |
| 07 | **115** | 19 | **154** | 31 | **205** | 43 | **274** | 55 | **365** | 67 | **487** | 79 | **649** | 91 | **866** |
| 08 | **118** | 20 | **158** | 32 | **210** | 44 | **280** | 56 | **374** | 68 | **499** | 80 | **665** | 92 | **887** |
| 09 | **121** | 21 | **162** | 33 | **215** | 45 | **287** | 57 | **383** | 69 | **511** | 81 | **681** | 93 | **909** |
| 10 | **124** | 22 | **165** | 34 | **221** | 46 | **294** | 58 | **392** | 70 | **523** | 82 | **698** | 94 | **931** |
| 11 | **127** | 23 | **169** | 35 | **226** | 47 | **301** | 59 | **402** | 71 | **536** | 83 | **715** | 95 | **953** |
| 12 | **130** | 24 | **174** | 36 | **232** | 48 | **309** | 60 | **412** | 72 | **549** | 84 | **732** | 96 | **976** |

5) 4 digits marking for±5% & ±1% 2512, 2010, size, for ±1% 1210, 1206, 0805 size:

For E24/E96 series, each resistor is marked with a four digits code on the protective coating to designate the nominal resistance value. For values below 97Ω6 the R is used as a digit. For values of 100Ω or greater, the first 3 digits are significant, the fourth digit indicates the number of multiple to follow.

6) Customer's Special Requirements 3 digits marking for ±5% E24 series 2512, 2010, size
First two digits for significant figure and 3rd digit for number of zeros

Example

| RESISTANCE | Jumper (0Ω) | 1Ω | 10Ω | 33Ω | 470Ω | 6800Ω | 47000Ω | 680000Ω | 1000000Ω |
|---|---|---|---|---|---|---|---|---|---|
| 3 digits marking | 000 | 1R0 | 100 | 330 | 471 | 682 | 473 | 684 | 105 |
| 4 digits marking | | 1R00 | 10R0 | 33R0 | 4700 | 6801 | 4702 | 6803 | 1004 |

## TESTS AND REQUIREMENTS

Essentially all tests are carried out according to the schedule of IEC publication 115-8, category **LCT**/**UCT**/56(rated temperature range : **L**ower **C**ategory **T**emperature, **U**pper **C**ategory **T**emperature; damp heat, long term, 56 days). The testing also meets the requirements specified by EIA, EIAJ and JIS.

The tests are carried out in accordance with IEC publication 68, "Recommended basic climatic and mechanical robustness testing procedure for electronic components" and under standard atmospheric conditions according to IEC 60068-1, subclause 5.3. Unless otherwise specified, the following value supplied :

Temperature: 15°C to 35°C.

Relative humidity: 45% to 75%.

Air pressure: 86kPa to 106 kPa (860 mbar to 1060 mbar).

All soldering tests are performed with midly activated flux.

| **TEST** | **PROCEDURE TEST METHOD** | **REQUIREMENT** | |
|---|---|---|---|
| | | **Resistor** | **0Ω** |
| Electrical Characteristics<br><br>**JISC5201-1: 1998**<br>Clause 4.8 | - DC resistance values measurement<br>- Temperature Coefficient of Resistance (T.C.R)<br>Natural resistance change per change in degree centigrade.<br>$\frac{R_2 - R_1}{R_1(t_2 - t_1)} \times 10^6$ (ppm/°C) $t_1$ : 20°C+5°C-1°C<br>$R_1$ : Resistance at reference temperature<br>$R_2$ : Resistance at test temperature | Within the specified tolerance Refer to "QUICK REFERENCE DATA" | <50mΩ |
| Resistance to soldering heat(R.S.H)<br>**MIL-STD-202**<br>**method 210** | Un-mounted chips completely immersed for 10±1second in a SAC<br>solder bath at 270°C ±5°C | ΔR/R max. ±(1.0%+0.05Ω)<br>no visible damage | <50mΩ |
| Solderability<br>**J-STD-002** | a) Bake the sample for 155°C dwell time 4hrs/ solder dipping 235°C / 5sec.<br>b) Steam the sample dwell time 1 hour/ solder dipping 260°C / 5sec. | 95% coverage min., good tinning and no visible damage | |
| Temperature cycling<br>**JESD22**<br>**Method JA-104** | 1000 cycles, -55°C ~ +155℃, dwell time 30min. / 1min. max. transition time<br>Remark: 2010 2512: dwell time 5~10min | ΔR/R max. ±(1.0%+0.05Ω)<br>No visible damage | <50mΩ |
| Moisture Resistance<br>**MIL-STD-202**<br>**method 106** | 65±2°C, 80~100% RH, 10 cycles, 24 hours/ cycle | ΔR/R max. ±(1.0%+0.05Ω)<br>No visible damage | <50mΩ |
| Bias Humidity<br>**MIL-STD-202**<br>**method 103** | 1000+48/-0 hours; 85°C, 85% RH, 10% of operation power | ΔR/R max. ±(2.0%+0.10Ω)<br>No visible damage | <50mΩ |
| Operational Life<br>**MIL-STD-202**<br>**method 108** | 1000+48/-0 hours; 35% of operation power, 125±2°C | ΔR/R max. ±(2.0%+0.1Ω)<br>No visible damage | <50mΩ |

| TEST | PROCEDURE TEST METHOD | REQUIREMENT | |
|---|---|---|---|
| | | Resistor | 0Ω |
| High Temperature Exposure<br>**MIL-STD-202 Method 108** | 1000+48/-0 hours; without load in a temperature chamber controlled 155±3°C | ΔR/R max. ±(2.0%+0.10Ω)<br>No visible damage | <50mΩ |
| External Visual | Electrical test not required. Inspect device construction, marking and workmanship | No visible damage | |
| Physical Dimension | The chip dimension(L, W, T, Tb, Tt) prescribed in the detail specification shall be checked by Protech 2.5D. | Within the specified tolerance | |
| Board Flex<br>**AEC-Q200-005** | Resistors mounted on a 90mm glass epoxy resin PCB(FR4),<br>bending once 2mm for 10sec. | ΔR/R max. ±(1.0%+0.05Ω)<br>No visible damage | <50mΩ |
| Terminal strength<br>**AEC-Q200-006** | Force: 1.8Kg, ( only 1Kg for 0402 2010 2512 )<br>Test time: 60±1sec. | No remarkable damage or removal of the terminations | |
| Thermal shock<br>**MIL-STD-202 method 107** | Test 55 to 155°C / dwell time 15min/ Max transfer time 20sec 300cycles | ΔR/R max. ±(1.0%+0.05Ω)<br>No visible damage | <50mΩ |
| ESD<br>**AEC-Q200-002** | Test contact 1.0KV (0.5KV for 0402 only) | ΔR/R max. ±(1.0%+0.05Ω)<br>No visible damage | <50mΩ |
| Short Time Overload<br>**JISC5201-1: 1998 Clause 4 13** | 2.5 times RCWV or max. overload voltage, for 5seconds | ΔR/R max. ±(2.0%+0.10Ω)<br>No visible damage | <50mΩ |
| Load life in Humidity<br>**JISC5201-1: 1998 Clause 4 24** | 1000 +48/-0 hours, loaded with RCWV or Vmax in humidity chamber controller at 40°C±2°C and 90~95% relative humidity, 1.5hours on and 0.5 hours off | ΔR/R max. ±(2%+0.10Ω)<br>No visible damage | <50mΩ |
| Load life (endurance)<br>**JISC5201-1: 1998 Clause 4 25** | 1000 +48/-0 hours, loaded with RCWV or Vmax in chamber controller 70±2°C, 1.5 hours on and 0.5 hours off | ΔR/R max. ±(2%+0.10Ω)<br>No visible damage | <50mΩ |

## 0201 (AEC Q-200 REV.D 2010)

| TEST | PROCEDURE / TEST METHOD | REQUIREMENT | |
|---|---|---|---|
| | | Resistor | 0Ω |
| Electrical Characteristics<br><br>JISC5201-1: 1998<br>Clause 4.8 | - DC resistance values measurement<br>- Temperature Coefficient of Resistance (T.C.R)<br>Natural resistance change per change in degree centigrade.<br>$\frac{R_2 - R_1}{R_1(t_2 - t_1)} \times 10^6$ (ppm/°C) $t_1$ : 20℃+5℃-1℃<br>$R_1$ : Resistance at reference temperature (20℃+5℃/-1℃)<br>$R_2$ : Resistance at test temperature (-55℃ or +125℃) | Within the specified tolerance<br>Refer to "QUICK REFERENCE DATA" | <50mΩ |
| Resistance to soldering heat(R.S.H)<br>**AEC Q200-15** | Un-mounted chips completely immersed for 10±1second in a SAC solder bath at 260℃±5°C | ΔR/R max. ±(1%+0.05Ω)<br>no visible damage | <50mΩ |
| Solderability<br>**AEC Q200-18** | a. 4hrs @ 155'C, 235'C , 5 secs<br>b. 8hrs steam, 235'C, 5secs | 95% coverage min., good tinning and no visible damage | |
| Temperature cycling<br>**AEC Q200-4** | 30 minutes at -55°C±3°C, 2~3 minutes at 20℃+5℃-1℃, 30 minutes at +125°C±3°C, 2~3 minutes at 20℃+5℃-1℃, total 1000 continuous cycles | ΔR/R max. ±(1%+0.05Ω) | < 50mΩ |
| Bias Humidity<br>**AEC Q200-7** | 1000 +48/-0 hours, in humidity chamber controller at +85℃/85%RH, 10% rated power | ΔR/R max. ±(5%+0.10Ω) | < 50mΩ |
| Operational Life<br>**MIL-STD-202 method 108** | 1000+48/-0 hours; 35% of operation power, 125±2°C | ΔR/R max. ±(5%+0.10Ω) | < 50mΩ |
| High Temperature Exposure<br>**AEC Q200-3** | 1000 hrs @ 125℃, un-powered | ΔR/R max. ±(5%+0.10Ω) | < 50mΩ |
| Bending strength<br>**AEC Q200 -21** | Resistors mounted on a 90mm glass epoxy resin PCB(FR4), bending once 2mm for 60sec. | No visual damaged,<br>ΔR/R max. ±(1%+0.05Ω) | < 50mΩ |
| Terminal strength<br>**AEC Q200-22** | Pressurizing force: 3N, Test time: 10±1sec. | No remarkable damage or removal of the terminations | |
| Vibration<br>**AEC Q200-14** | 5 g's for 20 min , 12 cycles each of 3 orientations | △R/R max≦±(1%+0.05Ω)<br>and no visible damage | < 50mΩ |
| Mechanical Shock<br>**AEC Q200-13** | Shock machine, half sine,<br>100G, 6msec, XX'YY'ZZ', 10times each | △R/R max≦±(1%+0.05Ω)<br>and no visible damage | < 50mΩ |
| ESD (HBM)<br>**AEC Q200-002** | Human body model, 1.5 Kohm, 100 pF, 0.4KV | ΔR/R max. ±(5%+0.10Ω) | < 50mΩ |

# PACKAGING

**Tape specifications** (unit :mm)

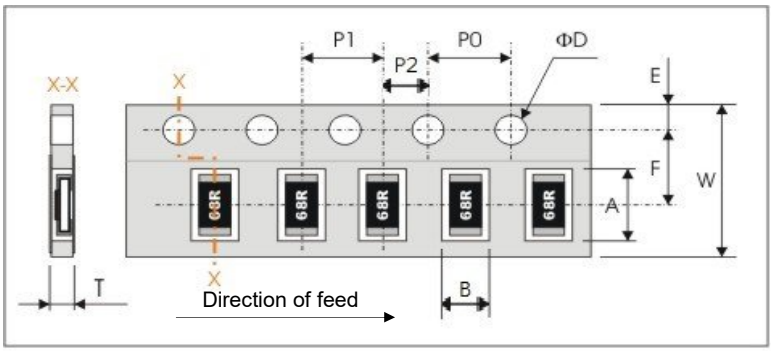


| Series No. | A | B | W | F | E |
|---|---|---|---|---|---|
| AT12 | 6.90±0.20 | 3.60±0.20 | 12.00±0.30 | 5.50±0.10 | 1.75±0.10 |
| AT0A | 5.50±0.20 | 2.80±0.20 | | | |
| ATA8 | 4.90±0.20 | 3.55±0.30 | | | |
| AT10 | 3.60±0.20 | 3.00±0.20 | 8.00±0.30 | 3.50±0.20 | 1.75±0.10 |
| AT06 | 3.60±0.20 | 2.00±0.20 | | | |
| AT05 | 2.40±0.20 | 1.65±0.20 | | | |
| AT03 | 1.90±0.20 | 1.10±0.20 | | | |
| AT02 | 1.90±0.10 | 0.70±0.10 | | | |
| AT01 | 0.67±0.05 | 0.37±0.05 | | | |

| Series No. | P1 | P0 | P2 | ΦD | T |
|---|---|---|---|---|---|
| AT12 | 4.00±0.10 | 4.00±0.10 | 2.00±0.10 | $\Phi 1.50^{+0.1}_{-0.0}$ | Max.1.2 |
| AT0A | | | | | Max.1.2 |
| ATA8 | 8.00 ±0.10 | 4.00±0.10 | 2.00±0.10 | $\Phi 1.50^{+0.1}_{-0.0}$ | 1.30±0.20 |
| AT10/AT06/AT05 | 4.00±0.10 | 4.00±0.10 | 2.00±0.10 | $\Phi 1.50^{+0.1}_{-0.0}$ | 0.80±0.10 |
| AT03 | | | | | 0.70 ±0.05 |
| AT02 | 2.00±0.05 | 4.00±0.10 | 2.00±0.10 | $\Phi 1.50^{+0.1}_{-0.0}$ | 0.50±0.05 |
| AT01 | | | | | 0.45 ±0.05 |

**Reel dimensions**

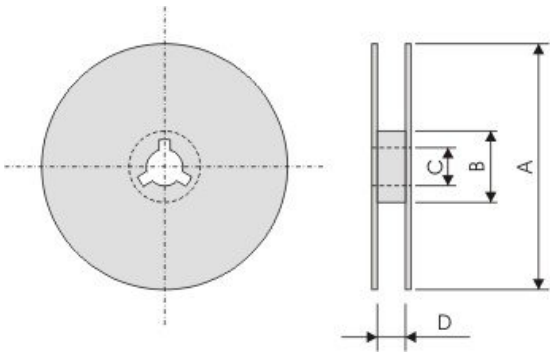


| Reel | A | B | C | D |
|---|---|---|---|---|
| 7” reel | Φ178.0±2.0 | Φ60.0±1.0 | 13.0±0.2 | 14.0±0.20 (12mm tape)<br>9.0±0.5 ( 8mm tape ) |
| 10” reel | Φ254.0±2.0 | Φ100.0±1.0 | 13.0±0.2 | |
| 13” reel | Φ330.0±2.0 | Φ100.0±1.0 | 13.0±0.2 | |

**Tape packaging :**

| Size | Packaging tape | Packaging code | | | B: poly-bag |
|---|---|---|---|---|---|
| | | 7"reel | 10"reel | 13"reel | |
| 2512,2010 | 12mm width plastic tape | 4,000pcs | 8,000pcs | 16,000pcs | 5000pcs |
| 1210,1206, 0805,0603 | 8mm width paper tape | 5,000pcs | 10,000pcs | 20,000pcs | 5000pcs |
| 0402 | | 10,000pcs | - | 70,000pcs | 5000pcs |
| 0201 | | 15,000pcs | - | 70,000pcs | 5000pcs |
| 1218 | 12mm width plastic tape | - | 3,000pcs | - | 5000pcs |

## Performance of Taping :

### Strength of Carrier Tape and Top Cover Tape

**-Carrier Tape**

When a tensile force 1.02kgf is applied in the direction of unreeling the tape, the tape shall withstand this force.

**-Top cover Tape**

When a tensile force 1.02kgf is applied to the tape, the tape shall withstand this force.

### Peel Force of Top Cover Tape
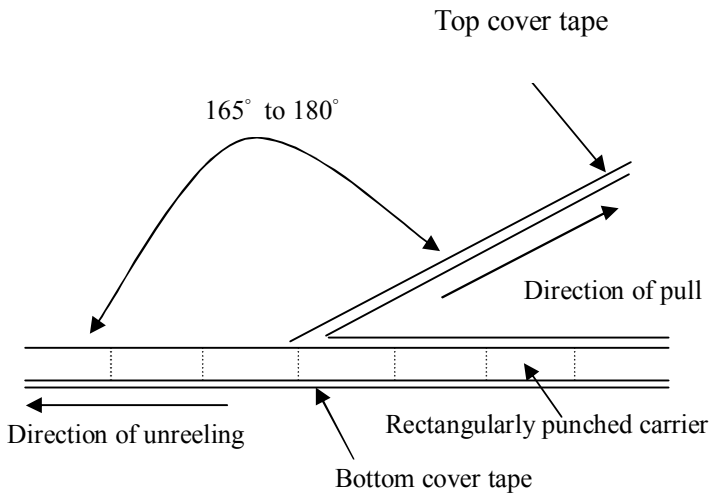
Unless otherwise specified, the peel force of top cover tape shall be 10.2 to 71.4 g f when the top cover tape is pulled at a speed of 300mm/min with the angle between the taped during peel and the direction of unreeling maintained at 165 to 180°as illustrated in Fig.