金屬化聚丙烯安全膜電容器（粉裝型）MTF Series
Metal Polypropylene Safety FilmCapacitor (Powdered) MTF Series

外觀圖 Outling Drawing

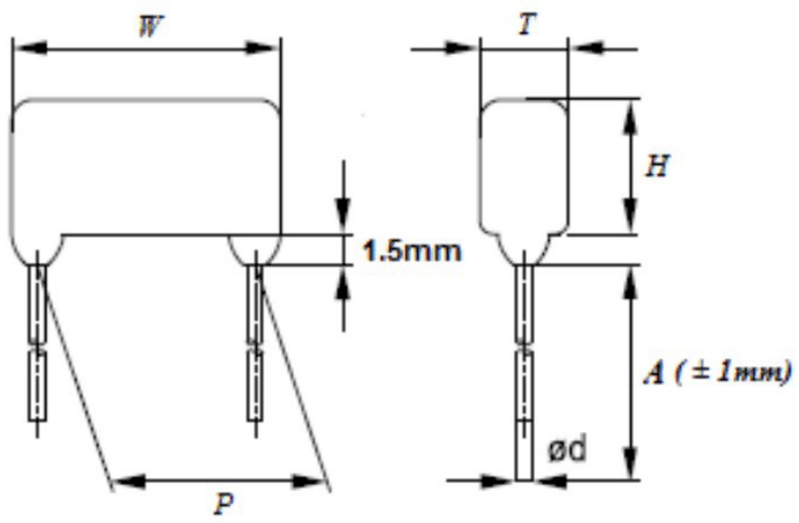

主要用途
適用于開關電源，電子鎮流器和變頻器等中間
電路直流濾波（DC–Link,P.F.C等）

Typical Applications
As intermediate circuit capacitors for SMPS, Electronic ballast,
Inverter (i.e. DC–Link, DC-filter and P.F.C)

特點
金屬化聚丙烯膜，無感捲繞結構
良好的電器性能
阻燃環氧粉末包封（UL94V–0）

Features
Metalized polypropylene film, non– inductive wound construction
Low loss at high frequency
Flame retardant epoxy resin powder coating (UL94V–0)

規格書 Specifications

引用標準 Reference Standard	GB/T 10190 (IEC 60384–16)	
氣候類別 Climatic Category	55/105/21	
工作溫度範圍 Operating Temperature Range	– 40℃~+105℃ (+85℃ to +105℃: decreasing factor 1.25% per℃ for UR)	
電容量範圍 Capacitance Range	0.1uF ~ 10uF	
額定電壓 Rated Voltage	400V、450V	
電容偏差 Capacitance Tolerance	± 5%(J)、 ± 10%(K)	
承受電壓 Voltage Proof	1.5UR (5s)	
損耗角 Dissipation Factor	≤0.10% (20℃,1kHz)	
絕緣電阻 Insulation Resistance	UR≤100V	CR ≤ 0.33uF IR ≥ 100,000MΩ CR > 0.33uF IR ≥ 30,000S

外型尺寸表 Dimension(mm)

400/450Vdc					
容量 μF	W	H	T	P	d
0.047	12.5	7.7	4.1	10	0.6
0.056	12.5	7.9	4.3	10	0.6
0.068	12.5	8.8	4.4	10	0.6
0.082	12.5	9.1	4.7	10	0.6
0.10	12.5	9.5	5.3	10	0.6
0.12	12.5	10.4	5.5	10	0.6
0.15	12.5	10.9	6	10	0.6
0.18	12.5	11.4	6.4	10	0.6
0.15	17.5	9.7	5.1	15	0.8
0.18	17.5	10.6	5.2	15	0.8
0.22	17.5	11	5.6	15	0.8
0.27	17.5	11.5	6	15	0.8
0.33	17.5	12	6.6	15	0.8
0.39	17.5	12.5	7.1	15	0.8
0.47	17.5	14.6	7.1	15	0.8
0.56	17.5	15.2	7.7	15	0.8
0.68	17.5	15.9	8.5	15	0.8
0.82	17.5	16.8	9.3	15	0.8
1.0	17.5	17.7	10.7	15	0.8
1.2	17.5	18.7	11.7	15	0.8
0.27	25.5	10.4	5	22.5	0.8
0.33	25.5	10.8	5.4	22.5	0.8
0.39	25.5	11.2	5.7	22.5	0.8
0.47	25.5	11.6	6.2	22.5	0.8
0.56	25.5	13.6	6.2	22.5	0.8
0.68	25.5	14.2	6.7	22.5	0.8
0.82	25.5	15.9	6.8	22.5	0.8
1.0	25.5	16.5	8	22.5	0.8
1.2	25.5	17.3	8.7	22.5	0.8

400/450Vdc					
容量 μF	W	H	T	P	d
1.5	25.5	18.2	9.7	22.5	0.8
1.8	25.5	19.1	10.6	22.5	0.8
2.2	25.5	20.2	11.7	22.5	0.8
2.7	25.5	21.5	12.9	22.5	0.8
0.68	30.7	13.5	6	27.5	0.8
0.82	30.7	14	6.6	27.5	0.8
1.0	30.7	14.7	7.7	27.5	0.8
1.2	30.7	16.4	7.8	27.5	0.8
1.5	30.7	17.2	8.7	27.5	0.8
1.8	30.7	18	9.4	27.5	0.8
2.2	30.7	20	9.8	27.5	0.8
2.7	30.7	23.2	9.9	27.5	0.8
3.3	30.7	24.3	11	27.5	0.8
3.9	30.7	25.3	12	27.5	0.8
4.7	30.7	26.6	13.3	27.5	0.8
5.6	30.7	28	14.7	27.5	0.8
6.8	30.7	29.6	16.4	27.5	0.8
8.2	30.7	31.4	18.2	27.5	0.8
10	30.7	33.5	20.3	27.5	0.8